Mounting accessories for process integration

Inline housing from SCHMIDT+HAENSCH are perfectly suitable for hygienic installations of processes in vessels or pipes.
The VariVent joint system allows easy installation of iPR instruments through a plug-in and clamping method. The inline housing can be used with process pressure up to 10 bar.
Some processes may require cleaning of the sensor face.
SCHMIDT+HAENSCH offers an optional cleaning nozzle system or an ultrasonic cleaning system.
For pipe size not shown in the table other combinations of bypass lines or reducers can be incorporated into the design.

Inline housing VariVent / welded

For the installation of an iPR in pipes by welding flange

Metric
Outside diameter in accordance to DIN 11850, series II, DIN 11866, series A

Nominal wide d	A	B	C	D	Order No.
DN 40	90	68	36	41	08211
DN 50	90	68	42	53	07223
DN 65	125	68	50	70	08628
DN 80	125	68	57,5	85	08629
DN 100	125	68	67	104	08631
DN 125	125	68	79,5	129	08632

Inch
Outside diameter in accordance to DIN ASME-BPE-a-2004, DIN 11866, series C

Nominal wide d	A	B	C	D	Order No.
1 1/2"	90	68	34,5	38,1	02796
2"	90	68	40,75	50,8	02634
2 1/2"	125	68	47	63,5	10993
3"	125	68	53,5	76,2	01113
4"	125	68	65,75	101,6	10995

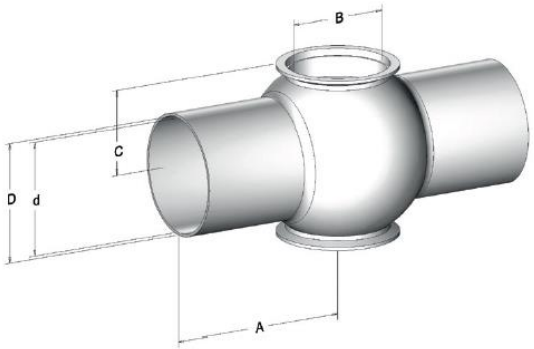

VariVent / welded

For installation of an iPR in pipes with TriClamp connection

VariVent housing connection T Order No. 07516



Inline housing for small volumes

For the installation of an iPR in small volumes, with hose and pipe connections

Case type	Order No.
BE stainless steel housing	07284
BE PTFE housing	09662
BV1 VariVent stainless steel housing, 1" pipec	01495
BV2 VariVent stainless steel housing 1/2" pipec	10328





METLI System 526 Montée du Lauze 30340 SALINDRES

- EURL METLI SYSTEM au capital de 5 000€ - RCS NIMES 531603223 - SIRET 531 603 223 00029 - APE 2651B - TVA Intra : FR89531603223
Siège social & Ateliers - Tél : 04 66 30 57 75 - Fax : 04 66 30 46 21 - Courriel : contact@metli-system.com - Site Internet : www.metli-system.com

PERFORMANCE LNE CERTIFICATION ISO 9001 Fabrication et réparation de saccharimètres

Inline housing VariVent / TriClamps ends

For installation of an iPR in pipes with TriClamp connection
Metric
Outside diameter in accordance to DIN 11850, series II, DIN 11866, series A

Nominal wide d	B	C	D	Order No.
DN 40	68	36	41	11004
DN 50	68	42	53	11005
DN 65	68	50	70	11006
DN 80	68	57,5	85	11007
DN 100	68	67	104	11008
DN 125	68	79,5	129	11009

Inch
Outside diameter in accordance to ASME-BPE-a-2004, DIN 11866, series C

Nominal wide d	B	C	D	Order No.
1 1/2	68	34,5	38,1	11055
2	68	40,75	50,8	11056
2 1/2	68	47	63,5	11057
3	68	53,5	76,2	11058
4	68	65,75	101,6	11059



Inline housing APV / welded

For the installation of an iPR in pipes by welding flange
Metric
Outside diameter in accordance to DIN 11850, series II, DIN 11866, series A

Nominal wide d	A	B	C	D	Order No.
DN 25	68	26	29	25,5	02735
DN 40	67	38	41	31,5	02490
DN 50	72	50	53	37,5	01667
DN 65	85	66	70	45,5	11060
DN 80	98	81	85	53,0	02667
DN 100	111	100	104	62,5	11009
DN 125	130	125	129	75,0	11014
DN 150	150	150	154	87,5	10996

Inch
Outside diameter in accordance to ASME-BPE-a-2004, DIN 11866, series C

Nominal wide d	A	B	C	D	Order No.
1	68	22,9	25,4	24,0	03324
1 1/2"	67	35,1	38,1	30,0	11080
2"	72	47,8	50,8	36,4	11081
2 1/2"	85	60,3	63,5	42,5	11082
3"	90	72,9	76,1	48,5	01068
4"	11197,6	101,6	61,3	11084	

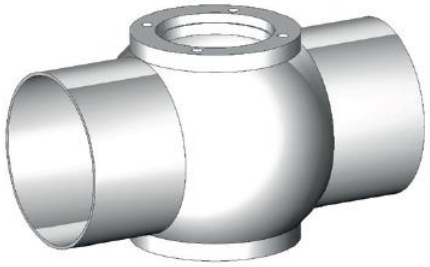

Prism cleaning options

High pressure fluid or steam cleaning system	Order No. 07140
Ultra sonic cleaning system	Order No. 08459



Fluid/steam cleaning system



Ultra-sonic cleaning system

METLI System 526 Montée du Lauze 30340 SALINDRES

- EURL METLI SYSTEM au capital de 5 000€ - RCS NIMES 531603223 - SIRET 531 603 223 00029 - APE 2651B - TVA Intra : FR89531603223
Siège social & Ateliers - Tél : 04 66 30 57 75 - Fax : 04 66 30 46 21 - Courriel : contact@metli-system.com - Site Internet : www.metli-system.com

PERFORMANCE LNE CERTIFICATION ISO 9001 Fabrication et réparation de saccharimètres



90° pipe installation with high pressure fluid cleaning system

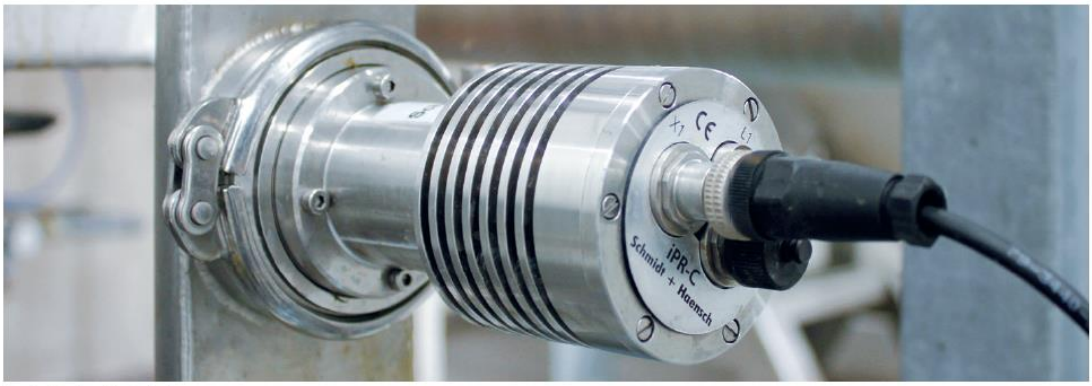

Straight pipe installation



Integration in automation system

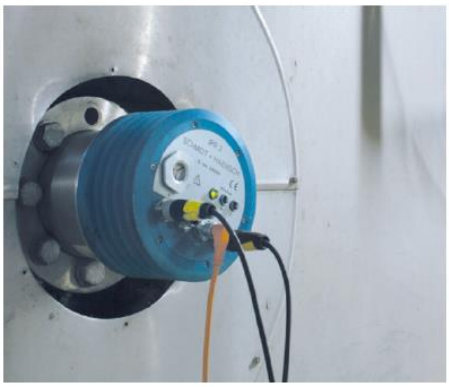

Vessel mounting



Straight pipe installation with ultrasonic cleaning system

METLI System 526 Montée du Lauze 30340 SALINDRES

- EURL METLI SYSTEM au capital de 5 000€ - RCS NIMES 531603223 - SIRET 531 603 223 00029 - APE 2651B - TVA Intra : FR89531603223
Siège social & Ateliers - Tél : 04 66 30 57 75 - Fax : 04 66 30 46 21 - Courriel : contact@metli-system.com - Site Internet : www.metli-system.com

Habilitation Chimie Pétro-chimie
Habilitation Nucléaire
PERFORMANCE LNE CERTIFICATION ISO 9001 Fabrication et réparation de saccharimètres